Electrical Circuits and Components

Electricity

Electricity is a form of energy that makes things work. Electrical appliances with cords and plugs are powered from the mains power supply. Cordless and portable devices are powered by electrical energy stored in cells or batteries.

Components

All electrical items are made up of components, which make them work.

Components have different jobs. For example, a cell provides electrical power, a buzzer creates a sound, a switch makes or breaks a circuit and a motor creates movement.

switch	lamp	cell	battery
wire	buzzer	motor	LED

Circuits

A circuit is a collection of components connected by wires through which electricity can flow. If a circuit forms a loop with a single path for the current to take, it is called a series circuit.

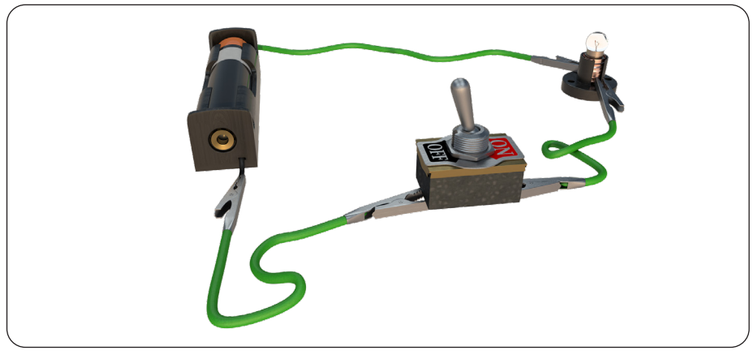

When electricity flows through all the components of a circuit, it is called a complete circuit.

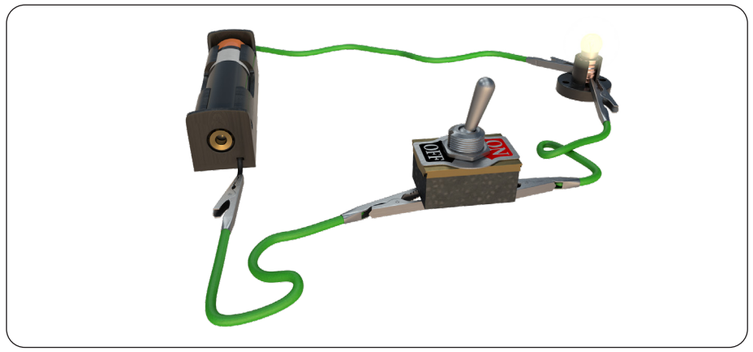

When electricity cannot flow through all the components of a circuit, it is called an incomplete circuit. Loose wires, damaged components and flat cells or batteries can all stop the flow of electricity around a circuit.

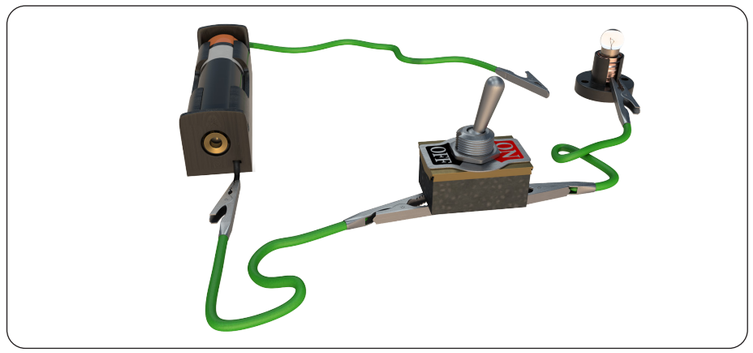

Conductors and insulators

Materials that allow electricity to flow through them are called conductors. Most metals are conductors. Materials that do not allow electricity to flow through them are called insulators.

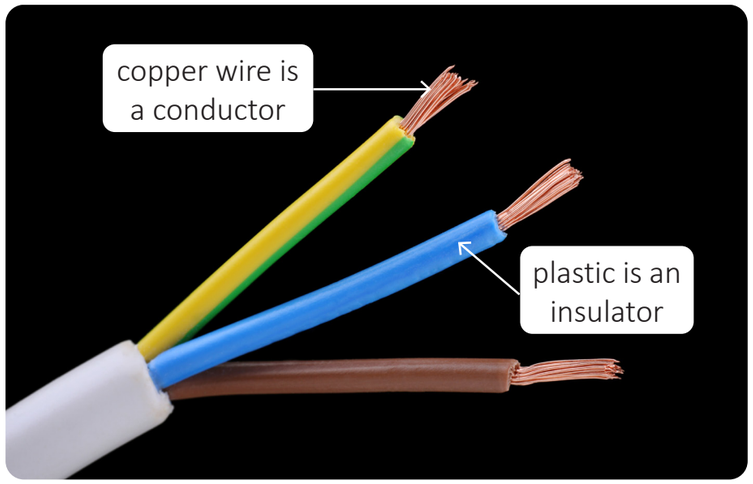

Electrical hazards

Electricity can be dangerous. If a mains electric current goes through your body, it can cause serious injuries or death.

There are many situations where electrical appliances can be dangerous. For example, overloading plug sockets can lead to fires and touching electrical appliances with wet hands can cause electric shocks. Touching damaged wires can also cause electric shocks.

Downloaded by Hearn at Roxton Church of England Academy on 11/01/23
Copyright © 2023 Cornerstones Education Limited

Circuit symbols

Circuit components are represented by different symbols.

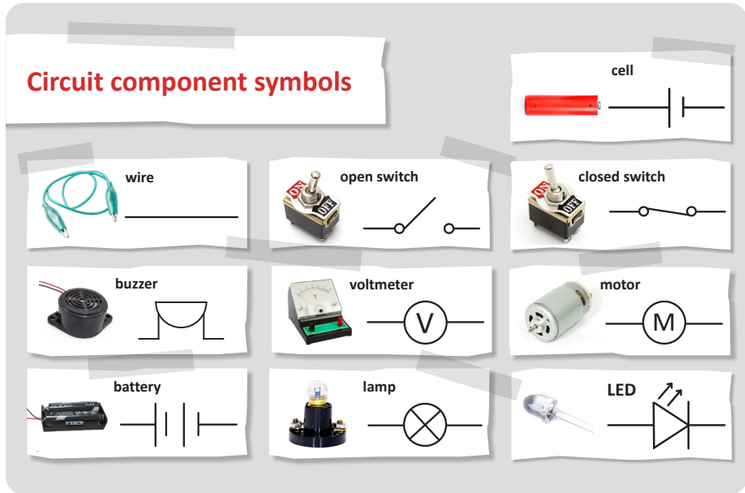

Circuit diagrams

A circuit diagram is a simplified drawing that represents a real electrical circuit. Circuit symbols are used to draw circuit diagrams.

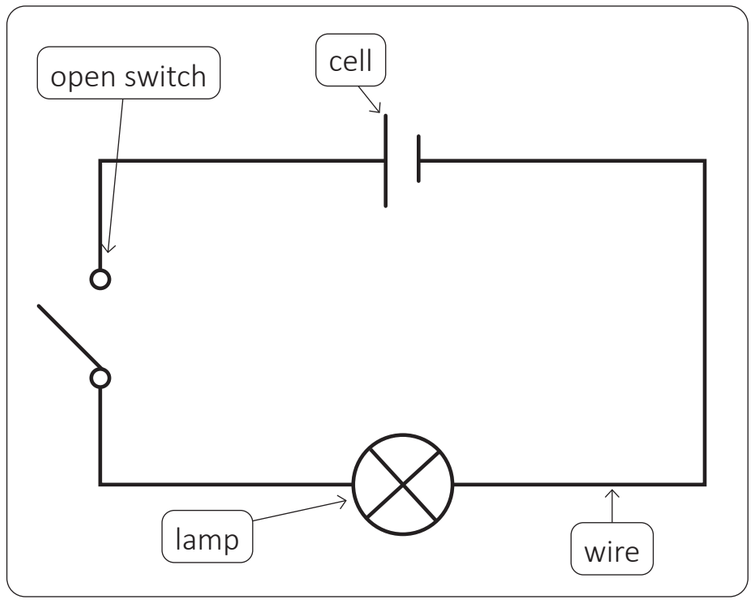

Electric current

An electric current is the flow of electric charge through a circuit. For an electric current to flow, a circuit must be complete. The electric current flows from the cell through the components and back to the cell.

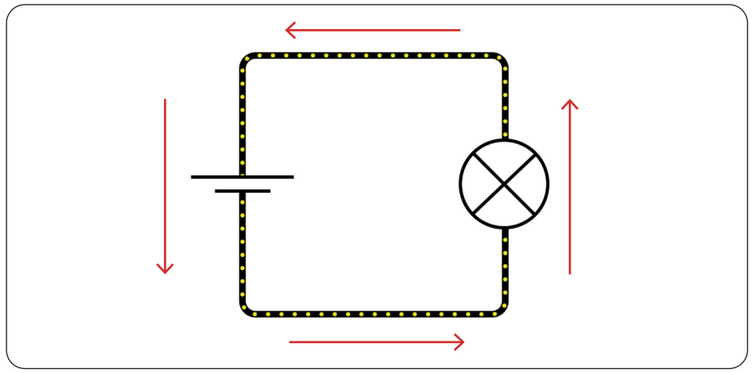

Voltage

In a circuit, the cell acts like a pump, pushing electric charge around the circuit. This pushing force can be measured using a voltmeter or multimeter. The pushing force is known as voltage, which is measured in volts (V).

Cells

Cells have different names, such as AA, AAA and D. They are labelled with the voltage they supply to a circuit. For example, an AA cell is labelled with 1.5V. As cells are used, their voltage, or pushing force, decreases.

Sensors

Many devices, such as nightlights, burglar alarms and thermostats, use sensors to monitor environmental variables, such as light, movement or temperature. These devices are programmed to give a response by switching on or off if the environment changes. For example, some nightlights have sensors that cause them to switch off when light levels rise.

Programming micro:bits

Micro:bits are small, programmable computers with an LED display and sensors. Micro:bits can be programmed to respond to environmental variables and are used to make a wide variety of different devices.

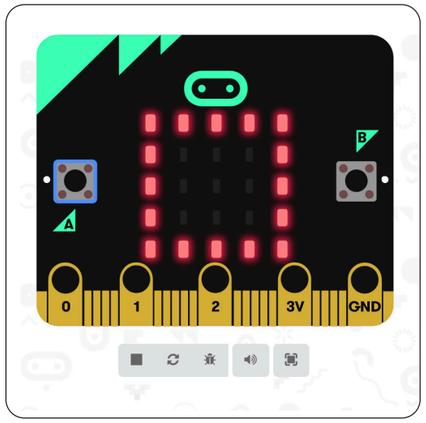

Glossary

appliance	A piece of electrical equipment used in the home.
environmental variable	A feature of the environment that changes, such as temperature or light.
LED	Stands for light-emitting diode. A device that produces light when an electric current flows through it. An LED only conducts electricity in one direction.
sensor	A device that detects changes in the environment.

Image from: Shutterstock editorial/Nadya Buyanowa

Downloaded by Hearn at Roxton Church of England Academy on 11/01/23
Copyright © 2023 Cornerstones Education Limited